DOI: 10.22199/S07160917.1992.0001.00004

Proyecciones
Vol. 11 N° 1, pp.21-28 Mayo 1992
Universidad Católica del Norte
Antofagasta - Chile

GRAPH WITH GIVEN AUTOMORPHIC GROUP AND GIVEN NUCLEAR NUMBER*

EDUARDO MONTENEGRO
Universidad Católica de Valparaíso, Valparaíso, Chile.

Abstract

In 1938, Frucht [2] proved that every finite group may be represented by a graph; in other words, given any finite group H, there is graph G whose automorphism group is isomorphic to H. Starting from this result a great many mathematicians have studied the following problem: "Given a finite group H and given a property P, is there a graph G that represents H and that satisfies the property P ?"

The aim of this paper is to solve a problem of such characteristics. The statement we get is the following: "Every finite group H may be represented by a graph G whose nuclear number is $n \geq 2$ *, where* n *is a given positive integer "*

* This work was supported by the research project FONDECYT 89-0164

1. Introduction.

Every graph has an automorphism group (permutations of their vertices that preserve adjacency). A famous result of Frucht [2] states that for any finite group H there is a graph G whose automorphism group is isomorphic to H In this direction it is said that the group H is represented by the graph G A pioneer in studying the existency of those graphs with given properties was Gert Sabidussi [4]. Hereby is habitude to call Sabidussi Type Theorem at those result. It is the subject of this work to prove a Sabidussi Theorem Type. This theorem establishes that for any finite group H and for any positive whole number $n \geq 2$, there is a graph G, that represents H and so that the nuclear number of G is n.

2. General Terminology.

In this paper a graph G is a system (V, E) where V is a finite, non empty set and E is a set of pairs $\{x, y\}$ where x and y are different elements in V Each element of V is called a **vertex** and each element of E is called an **edge**. The set V and the set E are denoted by $V(G)$ and $E(G)$ respectively. Two vertices u and v are called **neighbors** if $\{u, v\}$ is an edge of G. For any vertex v of G, denote by $\mathbf{N_v}$ the set of neighbors of v. To simplify the notation, an edge $\{x, y\}$ is written as xy Other concepts used in this work and not explicitely defined can be found in [1] or [3].

3. Solution of the Problem.

The nuclear number of a graph G is the maximun order among all orders of the complete subgraphs of G.

An operation, introduced by Montenegro in [3] called substitution is performed by replacing a vertex by a graph. A more precise description is the following: Assume that G and K are two graphs with no common vertices. For a vertex v in $V(G)$ and a function $s: \mathbf{N}_v \to V(K)$ we define the substitution of the vertex v by the graph K, as the graph $M = G(v, s)K$ such that:

$$(1)\, V(M) = (V(G) \cup V(K)) - \{v\} \quad \text{and}$$

$$(2)\, E(M) = (E(G) - \{vx \,/\, x \in \mathbf{N}_v\}) \cup E(K) \cup \{xs(x) / x \in \mathbf{N}_v\}$$

The vertex v is the vertex substituted by K in G, under the functions.

Figure 1 shows a diagram of the graph $G_1(v, s)G_2$, where the vertex v of G_1 is substituted by G_2 by using the function $s: \mathbf{N}_v \to V(G_2)$.

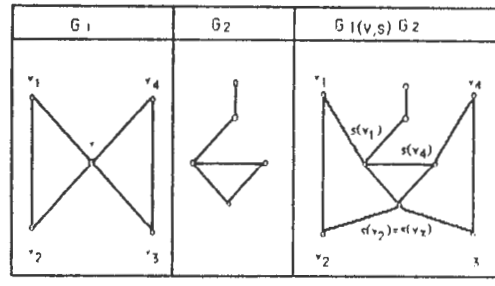

FIGURE 1

Now let $v_1, \ldots, v_n$ be the vertices of a graph G and $H_1, \ldots, H_n$ a sequence of graphs with no common vertices among themselves or with G. We will denote by $M_k = M_{k-1}(v_k, s_k) H_k$, $1 \leq k \leq n$, the graph which is obtained by substitution of k vertices of G by graphs H_i, $1 \leq i \leq k$, where $M_0 = G$. In other words, M_1 denotes a graph obtained by substitution of only one vertex of G, M_2 denotes a graph obtained by substitution of only one vertex of M_1, and so on. Note that every vertex substituted must belong to $V(G)$.

Figure 2 shows a diagram of a graph $K_4(v_i, s_i) S_i$, $1 \leq i \leq 4$, where the functions s_i are bijectives and the graphs S_i are isomorphic a triangle C_3.

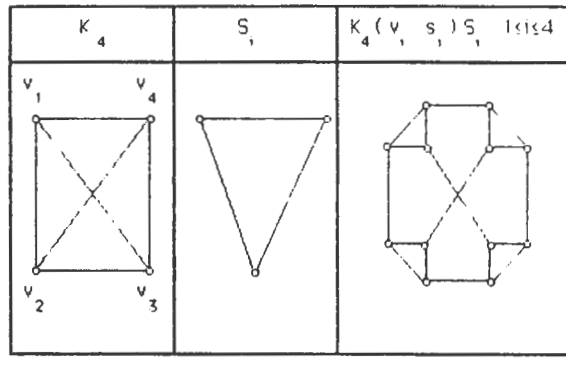

FIGURE 2

Lemma 3.1. In the family of asymetrics graphs there is a connected graph G with nuclear number n, where n is a given positive integer number.

Proof:

Case (1): $n = 1$

The trivial graph satisfies the required properties.

Case (2): $n = 2$

In the construction of the graph G we shall consider the cycle C_4 with $V(C_4) = \{v_1\ v_2, v_3, v_4\}$ and chains P_i, $1 \leq i \leq 4$ with no common vertices between themselves and with C_4

In that case the graph G with the required properties can be obtained by substituting every vertex v_i of C_4 by the chain P_i, by a constant function s_i that selects one terminal vertex of P_i

Figure 3 shows a diagram of the graph G

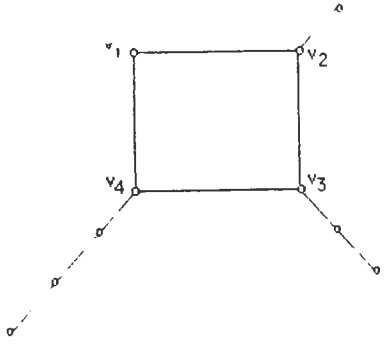

FIGURE 3

Case (3): $n \geq 3$

In this case, the construction of the required graph G is made by using the complete graph K_n with $V(K_n) = \{v_1, \ldots, v_n\}$ We shall substitute every vertex v_i of K_n by one chain P_i . by a constant function s_i that selects one terminal vertex of P_i

Look at Figure 4 for $n = 3$

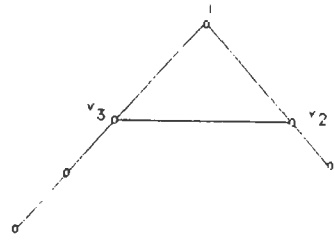

FIGURE 4

Clearly not every pair of vertices of G are similar, hence G is asymmetrical, and by construction, G is connected with nuclear number n

The following theorem solves the stated problem.

Theorem. Given a finite group H and given a positive integer number $n \geq 2$. there is a graph G . that represents H and so that the nuclear number of G is n

Proof:

If H is the trivial group we use Lemma 3.1.

If H is not the trivial group, we denote by $v_1, \ldots, v_p$ the elements of H and by v_1 its null element. We denote by $C = \{h_1, \ldots, h_m\}$ a generator set of H , $v_1 \notin C$ Since $|C| \geq 1$, we will consider two cases.

Case (1): $|C| > 1$

In this case we denote by $\mathcal{F}$ the graph constructed by Frucht [4],that represent H . This graph satisfies the required properties when $n = 2$, hence we may assume that $n > 2$

We denote by K the graph constructed in the proof of Lemma 3.1 (case (3)) and for each μ so that $1 \leq \mu \leq p \cdot m$, we define M_μ the former graph isomorphic to K , disjoint by vertex with $\mathcal{F}$ and so, and so every pair M_i , M_j have no common vertices.

We will construct the required graph G , by substituting each extreme vertex (chosen of degree 1) of every path of length $2k+1$ $(1 \leq k \leq m)$ of $\mathcal{F}$, by a unique graph M_μ We observe that this last substitution is realized by means of an injective function of substitution and across the only vertex of degree $n-1$ in M_μ .

Case (2): $|C| = 1$.

In this case we execute the proof only for the group H of order 2, since the other cases may be proven across the first part. Also we denote by $\mathcal{F}$ the graph constructed by Frucht [4], that represents H We distinguish cases $n = 2$ and $n > 2$

Subcase (1): $n = 2$

By substitution of the vertices of degree one in every path of length 3 by isomorphic copies of graph K constructed in case (2) of Lemma 3.1 we obtain a graph G with the required properties, through an injective function of substitution which chooses a vertex of degree 2 in a cycle of such a graph. In Figure 5 we show a diagram of G for a cyclic group $H = \{1, a\}$ with generator set $C = \{a\}$

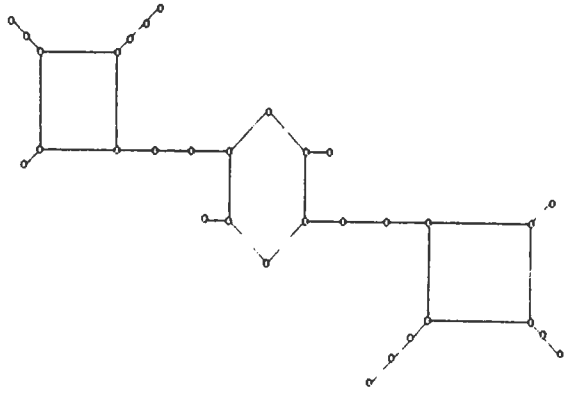

Figure 5

Subcase (2): $n > 2$

If we substitute every vertex of degree one in $\mathcal{F}$ whose distance to the cycle of $\mathcal{F}$ is 3 by a isomorphic copy of the graph K constructed in case (3) of Lemma 3.1, then we obtain the required graph G . In Figure 6 we show a diagram of G for $n = 5$

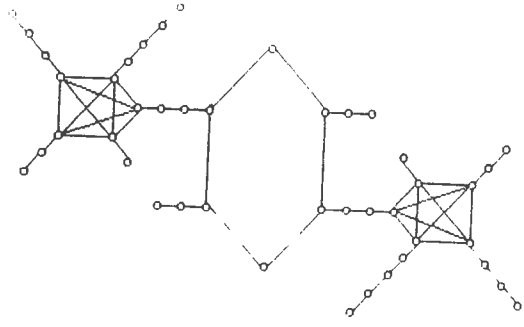

Figure 6

Now, we prove that the graph G , constructed for $n \geq 2$ have the required properties.

Since H is not the trivial group, the graph M_μ may be sent only in other of the same nature, and for every μ , the group of M_μ is the trivial group, hence we obtain $\mathrm{Aut}(G) = H$

Moreover, the nuclear number of M_μ is n and the nuclear number of $\mathcal{F}$ is 2. Hence we obtain that the nuclear number of G is n

Note: If on Lemma 3.1 we consider a path P_{i+j} and we define $K(j)$ through this path, then this result can be extended to an infinite graph G

REFERENCES

[1] *Chartrand, G. and Lesniak, L.* Graphs and Digraphs, *Wadsworth and Brooks/Cole Advanced Books and Software Pacific Grove, C.A. 1986.*

[2] *Frucht, R.*: Herstellung von Graphen mit vorgegebener abstrakter Gruppe, *Compositio Math.*, **6**, 239-250, 1938.

[3] *Montenegro, E.*: Un resultado sobre el orden y el tamaño de grafos que representan a un grupo finito, *Visiones Científicas*, **2**, 49-71, 1986, Valparaíso, Chile.

[4] *Sabidussi, G.:* Graphs with given group and given graph-theoretical properties, *Canad. J. Math.*,**9**, 515-525, 1957.

Recibido: 26 de Abril de 1991.

Eduardo Montenegro
Instituto de Matemáticas
Universidad Católica de Valparaíso
Casilla 4059, Valparaíso, Chile.